Bridgeless Power Factor Correction Boost Rectifier

Denzil Francisco Fernandes
M.E Student (Power and Energy Systems)
Department of Electrical and Electronics Engineering
Goa College of Engineering, Farmagudi

Nilesh Borker
Assistant Professor
Department of Electrical and Electronics Engineering
Goa College of Engineering, Farmagudi

Abstract

Most electronic and electrical appliances such as radio, televisions, computers, etc. uses DC supply internally. This is done by converting the source supply (single phase or three phase) into DC supply. The internal DC supply source makes the load compatible with its external power source. The presence of non- linear loads results into low Power Factor operation of the power system. Several techniques are adopted for Power Factor correction and harmonic reduction technique few of them have gained greater acceptance over the others. In this paper some of the bridgeless power factor correction boost converters are proposed which results in improved power factor and reduced harmonics content in input line currents as compared to conventional boost converter topology. In addition the bridgeless Power Factor correction boost converter is proving to have less conduction losses and has higher efficiency.

Keywords- Total Harmonic Distortion (THD), Bridgeless Power Factor Correction (PFC) Boost Rectifier, Continuous Conduction Mode (CCM), Discontinuous Conduction Mode (DCM), Dual Boost PFC Rectifier, Fast-Recovery Diodes, Single Phase Rectifier

I. INTRODUCTION

The basic block in many power electronic rectifier are uncontrolled diode bridge rectifiers with capacitive filter.
The bridge rectifier draws non-sinusoidal current from source which leads to harmonic injected into the lines. The bridge rectifiers contribute to a high THD, low PF, and low efficiency to the power system. These harmonic current causes many problems such as heating, voltage distortion, noises etc. leading to lower efficiency of the power system. Due to this, there is a need for power supplies that draw current with low harmonic content & also have power factor close to unity. The AC mains utility supply is supposed to be free from current harmonics and voltage spikes. Discontinuous input current that exists on the AC mains due to the non-linearity of the Rectification process should be shaped to follow the sinusoidal form of the input voltage. There are two types of Power factor Correction techniques passive and active. The Passive Power Factor correction techniques are best suited for low power and low cost applications. The active power factor correction techniques are more commonly used in higher power applications due to their batter performance

The most commonly used PFC converter is CCM type as it is simple and has high power capability. Constants efforts are been made to improve the efficiency of rectifiers, many power supply manufacturers have started considering bridgeless power factor correction circuit topologies. The bridgeless PFC topology is also known as dual boost PFC rectifiers. It reduce the conduction loss by reducing the number of semiconductor components in the line current path thus it is more efficient.

In this paper some of the bridgeless PFC boost rectifier topologies are discussed.

II. CONVENTIONAL PFC BOOST CONVERTER TOPOLOGIES

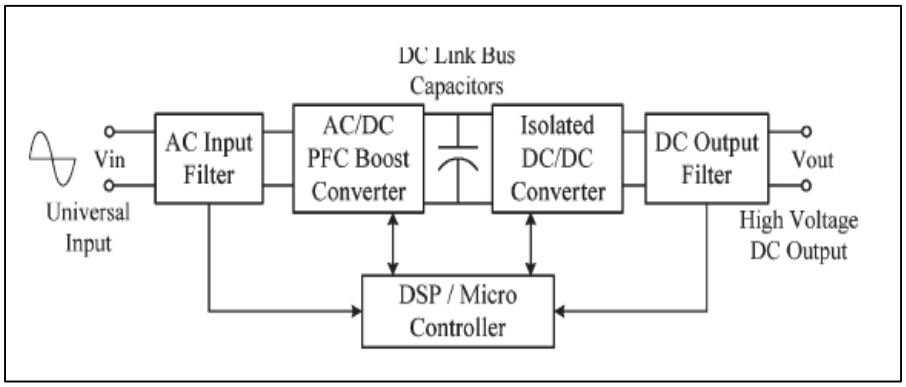

Fig. 1: Basic Block Diagram of Conventional PFC Boost Rectifier

The input stage for 1ϕ AC power supply is filtered and rectified. The rectified DC is again filtered using large electrolytic capacitors. This process results in a distortion in the input current with large harmonic content in the waveform. As a Result the PF becomes very poor (around 0.6). It is very important to reduce the current harmonic and to have high PF for good power supplies.

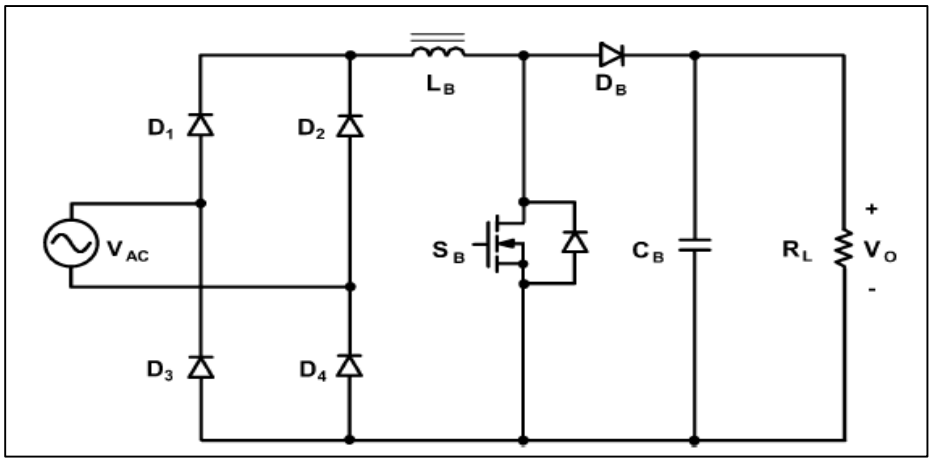

Fig. 2: Conventional PFC boost rectifier topology

The conventional boost rectifier topology is the most widely used topology for power factor correction applications. It basically consists of a front- end full-bridge diode rectifier followed by the boost converter. The diode bridge rectifier is used to rectify the AC input voltage to DC, which is then given to the boost stage. This approach is good for a low to medium power range applications. But in large power application Diode Bridge becomes an important part and it is necessary to deal with the problem of heat dissipation in limited surface area.

III. BASIC BRIDGELESS PFC BOOST CONVERTER

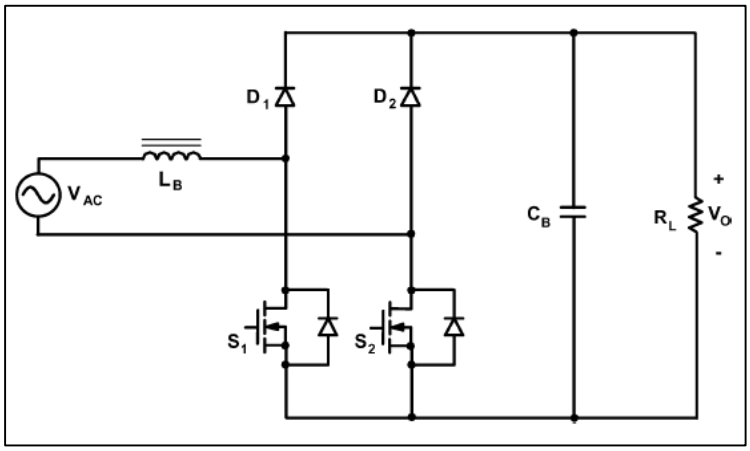

Fig. 3: The bridgeless PFC Boost Converter with two dc/dc boost circuits

The basic topology of the bridgeless PFC boost rectifier [2]–[16] is shown in Fig. 2. In bridgeless PFC boost rectifier, one diode is eliminated, so that the line current simultaneously flows through only two semiconductors, as shown in Fig. 3, resulting in reduced conduction losses. However, the bridgeless PFC boost rectifier in Fig.2 has significantly larger common-mode noise than the conventional PFC boost rectifier [20]–[22].

The bridgeless PFC Boost Converter is shown in Fig. 3. From a functional point of view, the circuit is similar to the common boost converter. In conventional rectifier, two of the diodes in series at any instant of time, whereas, in the bridgeless PFC configuration, current flows through only one diode and the return path is provided by Power MOSFET.

When the AC input voltage is in positive half, the gate of S1 is driven high and current flows from the input through the inductor LB, storing energy. When switch S1 is turns OFF, the inductor discharges through diode D1, load and returns through body diode of switch S2.

During the negative half cycle, switch S2 is operated. When switch S2 turns on, current flows through the inductor, storing energy. When S2 turns off, energy stored in inductor is released and the current flows through D2, through the load and back to the mains through the body diode of switch S1. Thus, in each half line cycle, one of the MOSFET operates as an active switch and the other one operates as a diode. The difference between the bridgeless PFC and conventional PFC is that in bridgeless PFC

converter the inductor current flows through only two semiconductor devices, but in conventional PFC circuit the inductor current flows through three semiconductor devices.

The lower two diodes of the conventional bridge rectifier are replaced by one MOSFET body diode in bridgeless PFC converter. Since both the circuits operates as a boost DC/DC converter; the switching loss of the converters are same. But there is efficiency improvement in bridgeless PFC converter as conduction loss due to diode is omitted. The bridgeless PFC converter also reduces the total components count as compared to a conventional PFC converter.

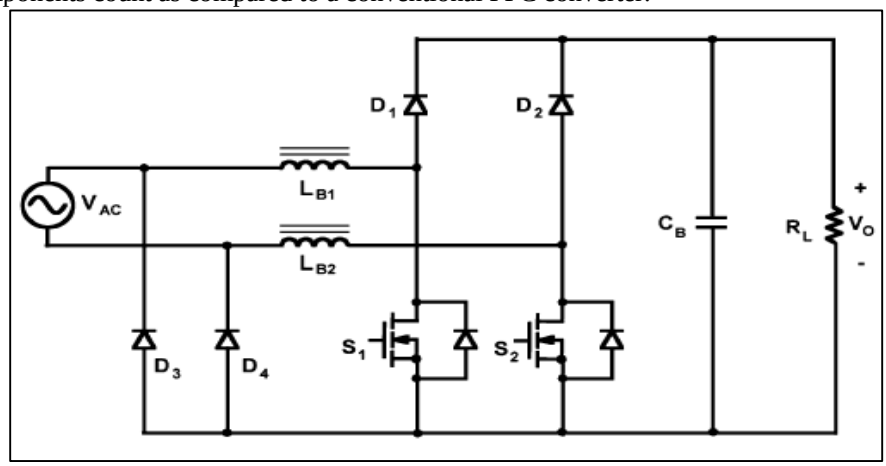

Fig. 4: The bridgeless PFC Boost Converter with two dc/dc boost circuits

To reduce the common-mode noise, the bridgeless PFC boost rectifier is modified so that it always provides a low frequency (LF) path between the ac source and the positive or negative terminal of the output. In Fig.4, in addition to diodes D3 and D4, which are slow recovery diodes, a second inductor is also added. Inductor LB2 operates during negative half cycle and inductor LB1 operates during positive half cycle.

In bridgeless PFC boost rectifiers, the switches S1 and S2 can be driven with the same PWM signal. This simplifies the implementation of the control circuit. The main drawback of the bridgeless PFC boost converter in Fig.4 is that it requires two inductors.

However, two inductors compared to a single inductor provide better thermal performance.

A. Operation of Bridgeless PFC Boost Converter

The operation of bridgeless power factor correction boost converter can be divided into four modes. Modes I and II comes under positive half cycle of input voltage and modes III and IV comes under the negative half cycle of input voltage, the first dc/dc boost circuit, LB1-D1–S1 is active through diode D4. Diode D4 connects the AC source to output ground.

The positive half cycle operation can be divided into two modes (Mode I and Mode II). During mode I, the switch S1 is in ON condition. When switch S1 turns OFF, inductor LB1 stores energy through the path Vin-LB1-S1-D4. During mode II operation, the switch S1 is in OFF condition. When switch S1turns ON, the energy stored in the inductor LB1 gets discharged and the current flows through diode D1, load RL, and returns back to the mains through the diode D4.

In the negative half cycle, the second dc/dc boost circuit, LB2-D2–S2 is active through diode D3. Diode D3 connects the ac source to the output ground.

The negative half cycle operation can be divided into two Modes (Mode III and Mode IV).

During mode III operation, the switch S2 is in ON condition. When switch S2 turns ON, inductor LB2 stores energy through the path Vin-LB2-S2-D3, during mode IV operation, the switch S2 is in OFF condition. When switch S2 turns OFF, the energy stored in the inductor LB2 gets discharged and the current flows through diode D2, load RL, and returns to the mains through the diode D3.

IV. SIMULATION RESULTS

The computer simulation of conventional power factor correction boost rectifier and proposed bridgeless PFC boost converter are done using Matlab/Simulink and the results are presented.

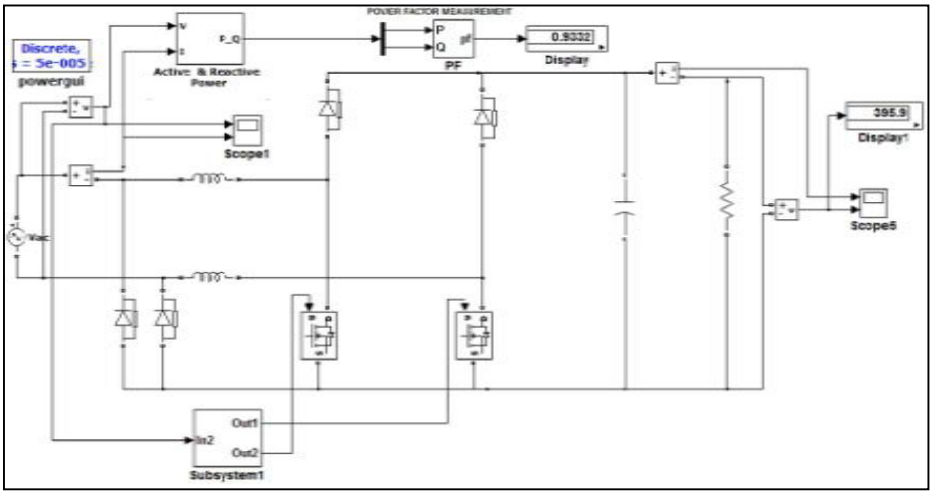

Fig. 5 (a): Simulation of Bridgeless PFC Boost converter

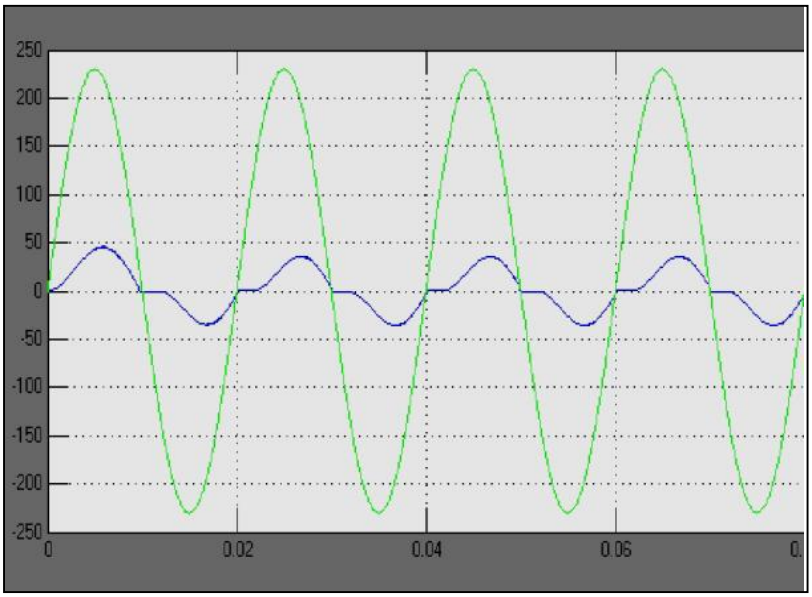

Fig. 5 (b): Input voltage and input current waveform

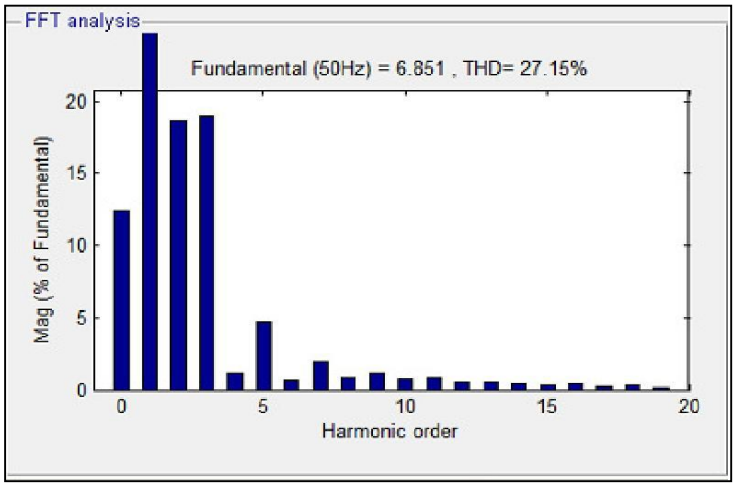

Fig. 5 (c): FFT analysis of input current waveform

A. Conventional PFC Boost Rectifier

Simulation circuit of conventional PFC boost rectifier is shown in Figure 5(a).

Simulation line voltage is operated at 230Vrms line voltage are shown in figure 5 (b). The power factor is obtained as 0.8866. Fig. 5(c) shows the FFT analysis of input current waveform.

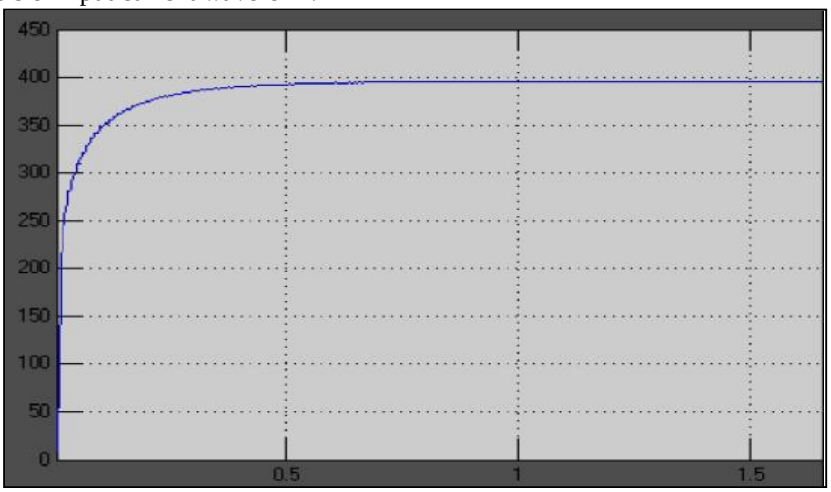

Fig. 5 (d): Input voltages and input current waveform

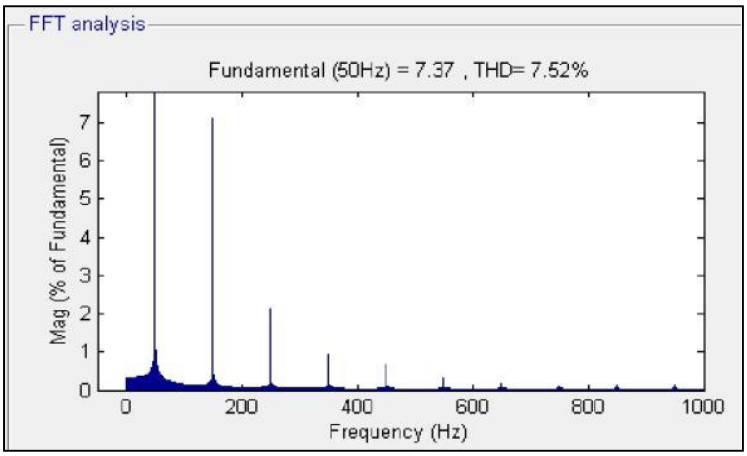

Fig. 5 (e): FFT analysis of input current waveform

B. Bridgeless PFC Boost Converter

Simulation circuit of bridgeless PFC boost converter is shown in Fig. 5(a). The controlled switch implemented is the power MOSFET which has inherently slow body diode Fig. 5(a) Simulation of Bridgeless PFC Boost converter Simulated line voltage and line current waveforms of bridgeless PFC boost rectifier operating at 230-Vrms line voltage are shown in figures 5 (b). The output voltage waveform is shown in figure 5 (d). FFT analysis of input current waveform is shown in figure 5(f). The THD percentage obtained in the simulation is <10% and the power factor is obtained as 0.9332

V. CONCLUSION

A 1ϕ Bridgeless PFC Boost Rectifier is modelled and simulated using Matlab. Compared to the conventional PFC boost converter, the bridgeless PFC boost converter, also called the dual-boost PFC rectifiers improves the efficiency of the front end PFC stage by eliminating one diode and reducing forward-voltage drop in the line-current path. The Bridgeless PFC Boost Converter provides a good solution to implement low cost high Power Factor AC–DC converters with fast output regulation.

ACKNOWLEDGEMENT

The author would like to thank his guide Prof. Nilesh Borker for his constant support and insights in the subject.

REFERENCES

[1] Environment Protecting Agency (EPA), Product Specifications: Eligibility Criterias & Partner Commitments [Online help]. Available: http://www.energystar.gov/index.cfm?c=product_specs.
[2] D. M. Mitchell, "AC - DC converter having an Improved Power Factor," U.S. Patent 4 412 277, Oct. 25, 1983.

[3] J. C. Salmon, “Circuit Topologies for Single-Phase Voltage-Doubler Boost Rectifiers,” in Proc. IEEE, Applied Power Electronics Conf. Mar. 1992, pp. 549–556.
[4] D. Tollik and B. Pietkiewicz, “Comparative Analysis of 1-ϕ active Power Factor correction Topologies,” in Proc. Int. Telecommunication Energy Conf., Oct. 1992, pp. 517–523.
[5] P.Enjeti and K. Martinez, “A high performance single phase AC to DC rectifier with input power factor correction,” in Proc. IEEE Applied Power Electronics Conf., Mar. 1993, pp. 190–195.
[6] A. F. Souza and L. Barbe, “A new ZCS quasi-resonant unity power factor converter with reduced conduction losses,” in Proc. IEEE Power Electronics Specialists Conf., Jun. 1995, pp. 1171–1177.
[7] A. E. Souza and I. Barbe, “A new ZVS-PWM unity power factor converter with reduced conduction losses,” IEEE Trans. Power Electron., vol 10, no. 6, pp 746–752, Nov. 1995.
[8] R. Martinez and P. N. Enjeti, “A high performance single phase AC to DC rectifier with input power factor correction,” IEEE Trans. Power Electron., vol. 11, no. 2, pp. 311–317, Mar. 1996.
[9] A. F. Souza and I. Barbi, “A new ZVS semiresonant high power factor rectifier with reduced conduction losses,” IEEE Trans. Ind. Electron., vol. 46, no. 1, pp. 82–90, Feb. 1999.
[10] J.-W. Lim and B.-H. Kwon, “A power-factor controller for singlephase PWM rectifiers,” IEEE Trans. Ind. Electron., vol. 46, no. 5, pp. 1035–1037, Oct. 1999.
[11] U. Moriconi, “A bridgeless PFC configuration based on L4981 PFC controller,” Application Note AN 1606, STMicroelectronics, 1/18–18/18 Nov. 2002.
[12] C. M.Wang, “Anovel zero-voltage switchingPWMboost rectifier with high power factor and low conduction losses,” in Proc. Int. Telecommunication Energy Conf., Oct. 2003, pp. 224–229.
[13] F. K. A. Lima, C. M. T. Cruz, and F. L. M. Antunes, “A family of turn-on and turn-off non-dissipative passive snubbers for soft-switching single-phase rectifier with reduced conduction losses,” in Proc. IEEE Power Electronics Specialists, Jun. 2004, pp. 3745–3750.
[14] C. M. Wang, “A novel ZCS PWM power factor preregulator with reduced conduction losses,” IEEE Trans. Ind. Electron., vol. 52, no. 3, pp. 689–700, Jun. 2005.
[15] W.-Y. Choi, J.-M. Kwon, E.-H. Kim, J.-J. Lee, and B.-H. Kwon, “Bridgeless boost rectifier with low conduction losses and reduced diode reverse-recovery problems,” IEEE Trans. Ind. Electron., vol. 54, no. 2, pp. 769–780, Apr. 2007.
[16] J. C. Salmon, “Circuit topologies for PWM boost rectifiers operated from 1-phase and 3-phase ac supplies and using either single or split dc rail voltage outputs,” in Proc. IEEE Applied Power Electronics Conf., Mar. 1995, pp. 473–479
[17] A. F. Souza and I. Barbi, “High power factor rectifier with reduced conduction and commutation losses,” in Proc. Int. Telecommunication Energy Conf., Jun. 1999, pp. 8.1.1–8.1.5.
[18] T. Ernö and M. Frisch, “Second generation of PFC solutions,” in Proc. Power Electronics Europe, 2004, no. 7, pp. 33–35.
[19] J. Liu, W. Chen, J. Zhang, D. Xu, and F. C. Lee, “Evaluation of power losses in different CCM mode single-phase boost PFC converters via simulation tool,” in Rec. IEEE Industry Applications Conf., Sep. 2001, pp. 2455–2459.
[20] H. Ye, Z. Yang, J. Dai, C. Yan, X. Xin, and J. Ying, “Common mode noise modeling and analysis of dual boost PFC circuit,” in Proc. Int. Telecommunication Energy Conf., Sep. 2004, pp. 575–582.
[21] B. Lu, R. Brown, and M. Soldano, “Bridgeless PFC implementation using one cycle control technique,” in Proc. IEEE Applied Power Electronics Conf., Mar. 2005, pp. 812–817.
[22] P. Kong, S.Wang, and F. C. Lee, “Common mode EMI noise suppression in bridgeless boost PFC converter,” in Proc. CPES Power Electronics Conf., Apr. 2006, pp. 65–70.
[23] Technical Data, Magnetics [Online]. Available: http://www.mag-inc. com/pdf/2006_Powder%20Core_Catalog_Technical_Data.pdf
[24] R. W. Erickson and D. Maksimovic´, Fundamentals of Power Electronics. Norwell, MA: Kluwer, 2001.
[25] P. L. Dowell, “Effects of eddy currents in transformer windings,” Proc. Inst. Elect. Eng., vol. 113, no. 8, pp. 1387–1394, Aug. 1966.
[26] S T. Erno and M. Frisch, ―Second generation of PFC solutions,‖ Power Electronics Europe, Issue, pp. 33-35, 2004. single phase bridge diode rectifier". IEEE Conf. ESC 4 June 2004, Aachen, Germany.
[27] [27]C.M. Wang, "A novel zero-voltage switching PWM boost rectifier with high power factor and low conduction losses," International Telecommunication Energy Conf. (INTELEC) Proc., pp. 224-229, Oct.2003.
[28] U. Moriconi, "A bridgeless PFC configuration based on L4981 PFC controller," Application Note AN 1606, ST Microelectronics, 1/18-
[29] L. Rossetto, G. Spiazzi, and P. Tenti, ―Boost PFC with 100-Hz switching frequency providing output voltage stabilization and compliance with EMC standards,‖ IEEE Trans. Ind. Applications .vol.3 6, pp.188–193,Jan./Feb.2000.
[30] R. Martinez and P. N. Enjeti, ―A high performance single phase AC to DC rectifier with input power factor correction,‖ IEEE Trans. Power Electron., vol. 11, no. 2, pp.311– 317, Mar.1996.
[31] H. Ye, Z. Yang, J. Dai, C. Yan, X. Xin, and J. Ying, ―Common mode noise modeling and analysis of dual PFC circuit,‖ International Telecommunication Energy Conf. (INTELEC) Proc., pp. 575-582, Sep.2004.