A Study of Crop Residue Machine for Conversion of Biomass in to Chip Form

Nilesh. P. Awate
Research Scholar
Department of Mechanical Engineering
G. H. raisoni College of Engineering Nagpur, India

Dr. D. J. Tidke
Professor
Department of Mechanical Engineering
Ex. Professor VNIT Nagpur, India

Abstract

Most of the area in the vidharba region of Maharashtra is occupy by various crop like, sugarcane, soyabine, peageon pee, check pee etc. But out of them cotton is a major crop of vidharba because of the good soil condition. The area covered by this crop is around 60% of total crop production. Generally, the farmer of vidharba region was burnt the cotton plant after picking of cotton. Because the cost of uprooting and collecting as well as store and transporting is not affordable to normal farmer. So for that reason the farmer is not gaining proper value of this good biomass. Due to non-availability of the small adjustable and affordable machine. The biomass colegedyed from one hector is around 6 tons in all over vidharba region the biomass available only due to cotton is around 15.9 Millan M.t. We are wasted this all biomass through burning. In this present work we are focused on this issue to solve this problem by applying simple cost effective solution. In the present research work we are studied varies machine available in India and abroad those are used for this kind of operation, we are determining the drawback of this machine for the Indian farm and also regarding cost what is effect on the productivity of vidharba farmer.

Keywords- Sugarcane, Crop, Uprooting, Peageonpee

I. INTRODUCTION

This research is done to study methods removal of cotton stalks from the field after removal of harvested cotton and its efficiency with various mechanical copper. Three different stalk has been studied in this paper namely splined-type, chain-type and vertical-blade rotating dredge. Experiments has been performed on measurement of post chopping height of cotton stalk from the ground and mathematical frequency distribution of stalk length of the stalks scattered is measured. Fuel consumption and time requirement is calculated for all three type. In which chain type stalk chopper require minimum fuel consumption and vertical-blade rotating dredge require maximum fuel consumption. While mean size of post chopped piece is minimum for splined type stalk chopper with maximum rate of 92% and mean size of post chopped piece is maximum for vertical-blade rotating dredge. It is maximum when it is used with plus grade cylinder.

Cotton is harvested for producing cotton fiber. After the chopping of cotton from field, cotton stalk is still remained in the soil which can be used for many other purposes. It is used as fuel in particle based board industries and paper industries. To reduce the erosion of soil it is better to incorporate plant residues into soil. Higher the plant residue leads to higher resistance to erosion and reduce the water flow. It is important factor in erosion control. Cotton stalk is mostly used as fuel due to unviability of mechanized facility to transport from farm to useful location. And also one important reason is that when cotton stalk is chopped and mixed with the farm soil, it increases the productivity of soil.

Cotton crop require 74% potassium, 41% phosphor and 48% nitrogen from soil. If cotton stalk is chopped and mixed with soil, all these ingredients are returned to soil. Hence farmers are willing to pay a good amount of price to for the removal of stalk from the farm.

Improper mixing of cotton stalk with soil cause problem in germination process and cultivation process in growing season. Also the manpower required for the harvesting and chopping the cotton stalk is very hard in particular busy season. Hence the mechanization is required in the processing of cotton harvest, cultivation process and chopping and mixing of cotton stalk and soil. If this process is not done properly will cause problem in mechanization of successive crop cultivation.

Currently in market there is very less machinery are available for this chopping and mixing of cotton stalk. Hence the aim of this study is targeted towards the comparison of various types of machinery and its performance in field.

Sönmezler Tarim Makineleri Co manufactured the first chopper. This chopper is of splined type chopper which is connected to tractor with the use of hung joint and two grade crusher. Figure 1 shows the rectangular mid arm which is use to stabilize the machine and it prevent the forward motion and help to generate the actual force required to chop the cotton stalk by vertical motion. The power required by the machine is provided by the tractor take off and provided to the chopper gearbox by belt pulley mechanism. Two grades of crusher are used in the chopper namely on-board double line fixed type blade and high inertia blade. In this mechanism shatter plates are used in the front of chopper and 32 hammer blades are used as shown in figure 2.

All rights reserved by *www.grdjournals.com*

Figure 3 shows a chain type stalk chopper. It is hung behind the tractor. It uses the free cut principle and is powered by tractor power take off. This motion is further transferred to ring gear to change its direction. Vertical shaft of 300mm length is used with chain mechanism. Cutting plate is covered by plate of 300 mm height and 3 mm thick to prevent any damage to machine and tractor. This machine is also called as cotton stalk gin.

Fig. 1: Splined stalk chopper

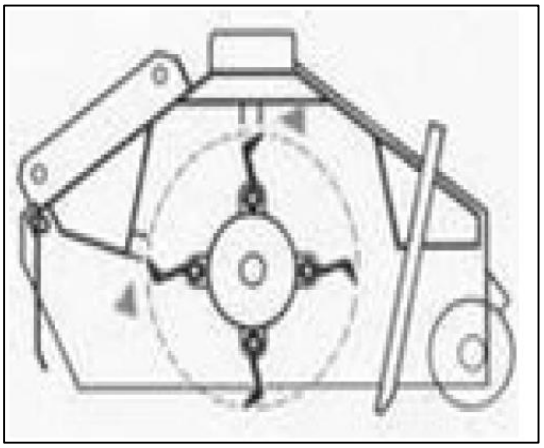

Fig. 2: Hammer blades of the splined stalk chopper

Fig. 3: Chained stalk chopper

All rights reserved by *www.grdjournals.com*

Fig. 4: Vertical-blade rotating dredge

Sa_lam et al studied the vertical-blade rotating dredge which consist of two parts namely rotor and vertical blades as shown in figure 4. Rotor is powered by tractor take off which further rotates the blades via gearbox.

The New Holland 718 is pull-type, powered by tractor take off for age harvester. Reversible feed roll drives the cylindrical cutter. Cut length can be adjusted by changing feed roll sprocket drive or by changing the number of knives on cutter head. To clean forage from cutter head optional paddles are used which is to be mounted on cutter head.

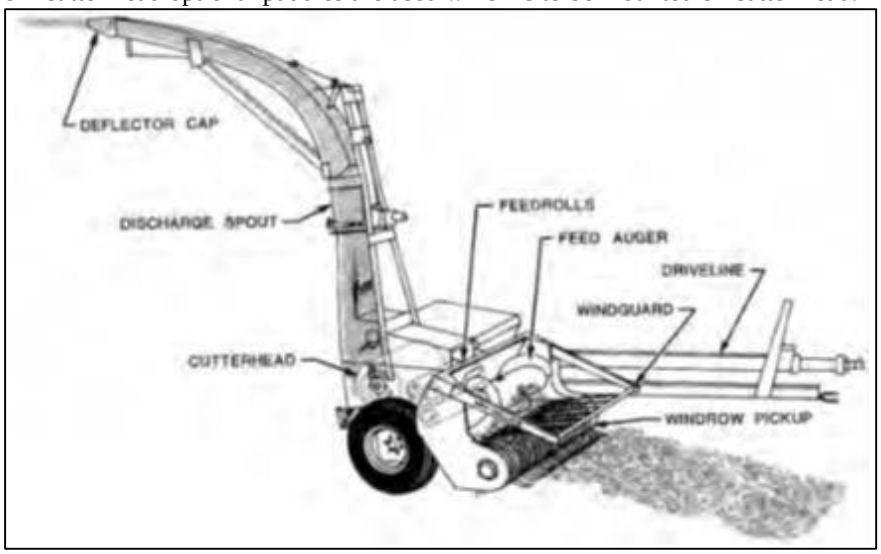

Fig. 5: Forage harvester

II. EASE OF USE AND ADJUSTMENT

A. Hitching

Holland 718 has a fixed clevis hitch. It was recommended that tractor draw bar should be 0.33 to 0.43m above the ground. This height was adjustable, by reversing clevis hitch. This machine was equipped with a 90 rps tractor take-off power.

B. Remote Controls

Holland 718 has electric remote controls for changing discharge spout direction, forward or reverse feedroll clutch and defl ector angle. Eclectic actuators can be controlled from tractor cab with the help of electric control console.

C. Windrow Pickup

The windrow pickup had very good feeding characteristics in cotton crops. It has significant losses at 4 mph. Adjustment for two different feed-augers can be possible which take up to 20 min to adjust. It is possible to get pickup height with the help of adjustable skid.

All rights reserved by *www.grdjournals.com*

D. Two-row Row Crop Header

Figure 6 shows two-row row crop header. It has rotary knives at a row spacing and chain gathering system. The knives are made of 760 mm plates. It has adjustable header for 710mm to 1020mm raw spacing. It is best suitable at speed of 4 mph. To match chain gathering speed to match the ground speed three drive sprockets were used.

E. Feed rolls

Feed rolls are most important in many crops. Plugging take place in bunchy wind rows at high speed while unplugging take place by reversing feed roll drive. Adjustable scraper is used in lower rear and smooth feed roll.

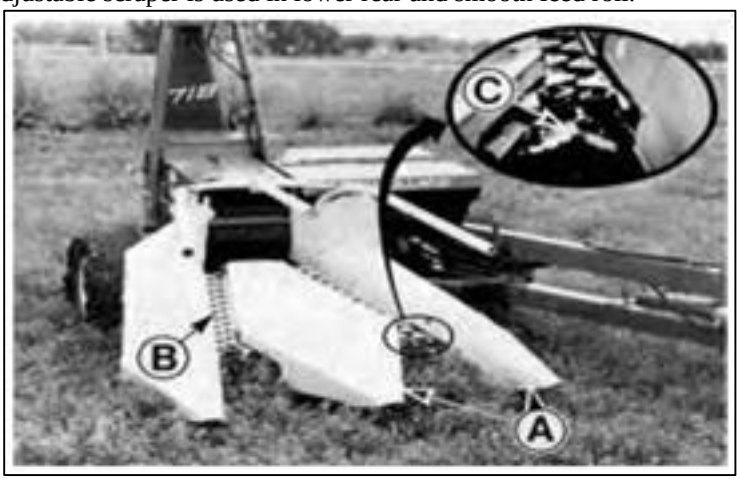

Fig. 6: Two-row type Crop Head: (A) Divider Point, (B) Gathering Chain, (C) Serrated Cutting plates.

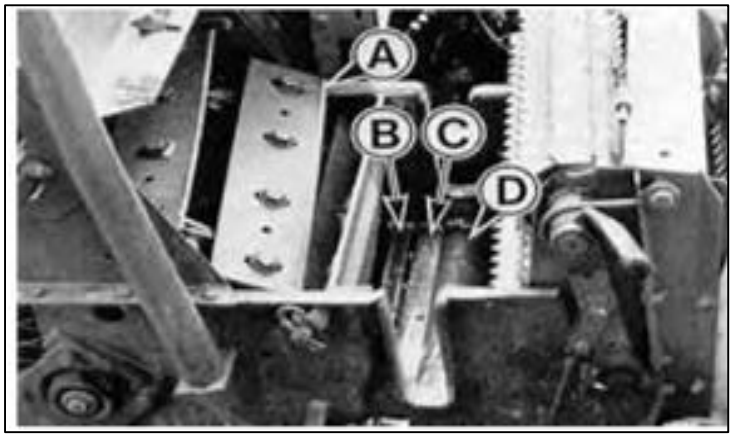

Fig. 7: Cutter head and Feed roll Assembly: (A) Knifes, (B) Shear disks (C) Scraper, (D) Smooth Feed roll.

F. Cutter Head Plugging

It occurred many times in the test, mostly for moisture content above 60%. The manufacturer suggested cutter head to housing clearance is 1mm for output at higher moisture crops. The adjustment procedure was poorly outlined in the operator manual and the clearance was impossible to judge properly. Manufacturer suggested use of cutter head paddle for high moisture. In case of proper installation, paddles need to be bent and cut. It is suggested modifying cutter head paddle provide easy installation.

G. Discharge Spout

Discharge spout is as shown in figure 8. It is adjustable by removing or adding Pipe sections. The dimension of extensions used were 15 inch vertically and48 inch horizontally. Deflector cap angle and spout rotation controls the forage discharge direction and it is operated by remote controls.

H. Knife Sharpening

A ratchet mechanism lowers the stone for contacting the knives and lever drive the stone to cutter head. By loosening two bolts clearance of shear can be adjusted. But only limited access is provided.

All rights reserved by *www.grdjournals.com*

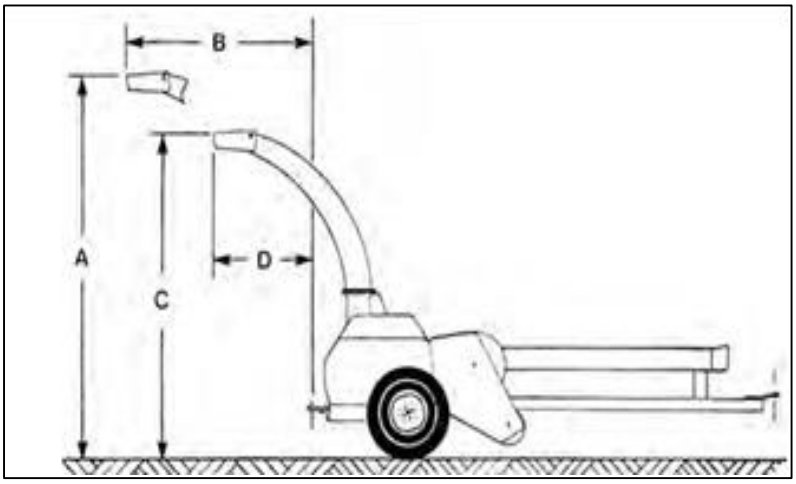

Fig. 8: Discharge Spout Dimensions: (A) Lift, with extensions, 3850 mm: (B) Reach, with extension, 2470 mm: (C) Lift, 3295 mm: (D) Reach, 1010 mm.

I. Adjusting Cut Length

By removing and adding cutter head knives, the length of cut can be adjusted. Changing feed roll sprocket was easy and provides uniform cut. Cut length setting is adjustable in the range of 0.1 to .06 inch.

J. Exchanging Header Attachments

It is easy for assembling or dissembling the windrow pickup. Two pins held it in proper place. Pins were easily accessible. It was necessary to release header floatation spring tension or to pin the lift arms in the down position and break the header drive chain when changing attachments.

K. Transporting

The draw pole could be placed in one of four positions. The extreme right position was used for transporting while the two left positions were used during field operation. The spring loaded rope from the tractor seat made changing from field position to transport position easy.

L. Lubrication

Holland 718 has thirty pressure greases requires daily lubrication and four pressure greases requires lubrication two time in a day.

Fig. 9: Forage harvesting

III. OPERATOR SAFETY

Holland 718 has been safe to operate with less maintenance, but it requires manufacturer's safety recommendations need to be followed. Several safety recommendations were included in the operator manual.

All rights reserved by *www.grdjournals.com*

IV. INTRODUCTION

A. Water Hyacinth Chopper cum Crusher

Water hyacinth is one of the most persistent, troublesome and predominant aquatic weed in the world. But it faced economic and ecological problems in many countries. Its major problem is the higher cost of transportation of fresh harvested water hyacinth.

There are three types of choppers; cylindrical, flail and flywheel which is used for published data suggests and agricultural forage chopping that power loss due to mechanical losses and water resistance were high in flail cutters and its accuracy was not acceptable. Hence cylindrical chopper with crusher was developed and evaluated for crushing and chopping of water hyacinth.

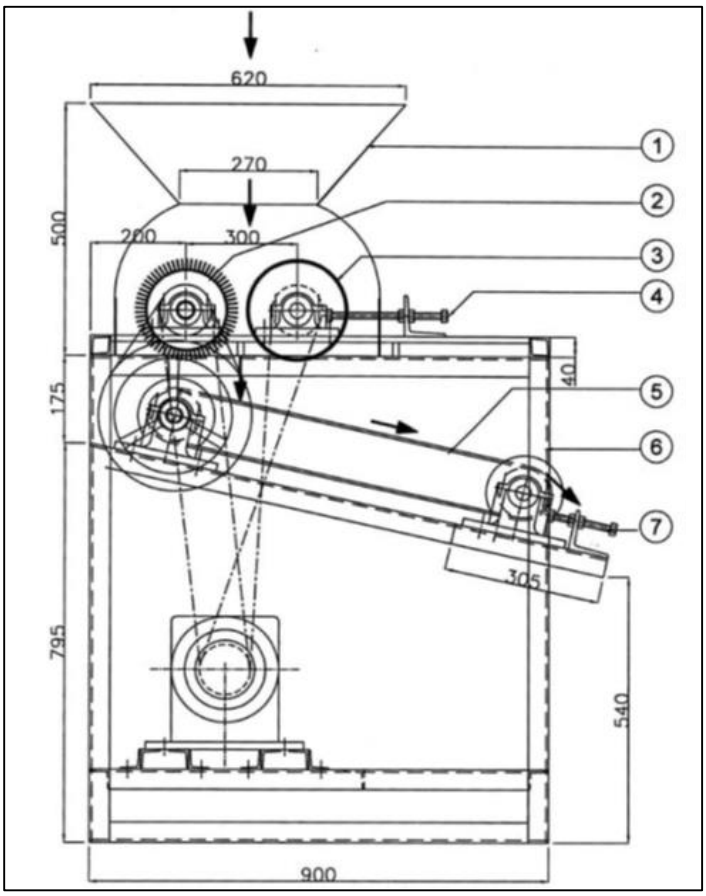

Fig. 10: Water hyacinth chopper cum crusher: (1) hopper; (2) cutting roller blades; (3) pressing roller; (4) roller gap adjustment screw; (5) conveyor belt; (6) frame; (7) conveyor belt tension screw; all dimensions in mm.

Cotton stalks management the implements available and being used in other crops were evaluated for their suitability in cotton stalk management.

B. Flail Type Chopper cum Loader

Figure 11 shows stationary view of paddy straw chopper. Flail chopper cum loader for paddy straw cutting followed by loading locally available machines like paddy straw chopper, tractor operated rotavator and flail type chopper cum loader were found to have application in effective management of cotton stocks. Mixing of standing cotton residue in soil with rotavator was not very effective however mixing of shredded cotton stalks with rotavator yielded good results as approx. 83 % of both the varieties viz. RCH 134 and IT 905 were mixed in the soil. Approx. 70 % cotton stalks were shredded in size range of up to 20 cm for all three cotton varieties with Flail type chopper cum loader. Field capacity of flail type chopper cum loader varied from 0.25 to 0.35 hath.

All rights reserved by *www.grdjournals.com*

Fig. 11: A view of Flail type chopper cum loader for paddy straw cutting and loading

C. HiSpeed Cotton Stalk Puller / Chopper

The AMADAS Model SPC Hi-Speed Cotton Stalk Puller/Chopper. The Cotton Stalk Puller/Chopper is a patented, uniquely integrated system used for extracting and chopping up cotton stalks and their roots. This new system provides you with a significant advantage over conventional mowing and discing. The Cotton Stalk Puller/Chopper removes each stalk's entire root system, effectively breaking up the lifecycle of insects and diseases that over winter in the remaining stalk and root usually left behind by shredders and mowers. The effectiveness of the Cotton Stalk Puller/Chopper lies in the two-part system that is incorporated into a single machine. The tandem, shaft-mounted, heavy-duty turf tires rotate against one another to grip the stalks, while the forward motion of the tractor pulls the stalks and root systems out of the ground and then releases them.

Fig. 12: Amadas cotton up rooter

Table 1: Specifications

Particular	*SPC-4*	*SPC-6*
Number of rows	*4*	*6*
Row width	*36'',38'',40''*	*36,38''*
Recommended speed range	*6-12MPH*	*6-12MPH*
Tractor Requirement	*Std Category3*	*Std Category3*
Tractor recommendation	*Minimum160hp tractor*	*Minimum190hp tractor*
Overall length	*13'3''*	*19'3''*
Overall width	*5'8''*	*5'88''*
Overall Height	*5'2''*	*5'4''*
Number of blade	*32*	*60*
Shipping weight	*4800*	*9800*
Operating Weight	*6500lbs*	*11500lbs*
Drum diameter	*12''*	*16''*

All rights reserved by *www.grdjournals.com*

D. John Deere

Turn your John Deere combine into a crop residue manager. Achieve a finer cut, wider spread, and superior performance with a complete MAV residue manager or a MAV rotor upgrade to the factory chopper. Improve the MAV rotor upgrade performance even more with these options:

– Optimized 12 vane tailboards for the widest spreading capabilities up to 45 feet.
– Tight knife bar kit (1 inch counter knife spacing) for the finest possible cut.

Fig. 13: John Deere

E. Massey Ferguson

Massey 8000 and 9000 series rotary combines can be upgraded with the complete MAV residue manager. Both straw and chaff are spread with this chopper. Tight knives are standard for the finest cut. The split tailboard design rapidly adjusts to changes in harvesting conditions or cutter bar width. Want to bale straw? You can change from chopping to windrowing straw and chaff in seconds with no drive belt adjustments required. A new rotating counter knife system can help reduce blade damage when foreign objects pass through the chopper.

Fig. 14: Massey Ferguson

F. Caterpillar

The MAV residue manager is available as a complete chopper upgrade for Cat Lexion 400 series and Challenger 600 series combines. Both straw and chaff are spread with this chopper. Tight knives are standard for the finest cut. The split tailboard design rapidly adjusts to changes in harvesting conditions or cutter bar width. Want to bale straw? You can change from chopping to windrowing straw in seconds. Chaff is spread while you windrow. A new rotating counter knife system can help reduce blade damage when foreign objects pass through the chopper.

All rights reserved by *www.grdjournals.com*

Fig. 15: Caterpillar

G. Case IH

Case IH Axial Flow combines can be upgraded with the complete MAV residue manager. Both straw and chaff are spread with this chopper. Tight knives are standard for the finest cut. A simple, rugged latch releases the chopper to swing aside for easy access to the combine sieve. The 7010 and 8010 combines are equipped with a fixed-in-place MAV residue manager.

Fig. 16: Case IH

V. CONCLUSION

In above study it is observed that various type of machine is used presently for the convention of biomass in either chip or powder form.

Most of the machine have required high capacity tractor for performing chipping or harvesting operation. The range of tractor starting from 45hp to 105hp. In above study it is observed that most of the machine is used only for the harvesting of biomass. In this student one thing is clearly known that none of small machine is available in the market for the conversion of available biomass. Also in student it is observer that none of detachable equipment are available those are utilizing the PTO power of tractor. Also in the study it is clear that more scope are available for developing small tractor operated equipment those are detachable from tracer also it will be utilized PTO.

In the study it is observed that the big machine cost is not affordable for the Indian farmer. The machinery weight is also another parameter those are play very important role because due to heavy machine more compaction is create on the filed

All rights reserved by *www.grdjournals.com*

REFERENCES

[1] A Cylindrical Chopper with Crusher for Water Hyacinth Volume and Biomass Reduction Shailendra M. Mathur,And P. Singh . J. Aquat. Plant Manage. 42: 95-99
[2] A study on the chopping and mixing of cotton stalkswith soil Cevdet Sa_lam1, Ferda Kaplan1 and Refik Polat, African Journal of Biotechnology Vol. 9(30), pp. 4764-4775, 26 July, 2010 ISSN 1684–5315
[3] Maximum air velocity straw chopper(MAV)Redekop Box178A ,RR#Hwy16west Saskatoon,SK Canada S7K3J7
[4] Technical mission on cotton TMC MM-1 annual report2009-2010
[5] Evaluation Report 200, Evaluation Report No. E0180A Printed: May, 1981, Tested at: Portage La Prairie ISSN 0383-3445
[6] Hi-SpeedCotton StalkPuller/ChopperSPC-4/SPC-61st Edition Hi-Speed Cotton Stalk Puller/Choppers are manufactured by Amadas Industries.www.amadas.com]P.O. Box 1833 / Suffolk, VA 23431100 Holland Road / Suffolk, VA 23434(shipping)(757) 539-0231 (phone)

All rights reserved by *www.grdjournals.com*