Mitigation of Voltage Sag and Swell by Ant Colony Optimization Technique using DPFC

B. Gopinath
Associate Professor & Head of the Department
Department of Electrical and Electronics Engineering
Vivekanandha institute of Engineering and technology for Women, Tiruchengode, Namakkal District-637205

E. Keerthana
PG Scholar
Department of Electrical and Electronics Engineering
Vivekanandha institute of Engineering and technology for Women, Tiruchengode, Namakkal District-637205

Abstract

This paper presents the mitigation of voltage sag and swells in Distributed Power Flow Controller (DPFC). The DPFC is the next generation of Unified Power-Flow Controller (UPFC). The DPFC can be considered as a UPFC with an eliminated common dc link. The active power exchange between the shunt and series converters, which is through the common dc link in the UPFC, is now done through the transmission lines. In DPFC many single phase converters are used instead of one three phase converter. The cost of the DPFC system is lower. Here, the capability of DPFC is observed for the transmission line based on Ant Colony Optimization (ACO). Based on the performance, we can say that ant colony optimization based DPFC gives better compensation than other Controller based DPFC. Matlab/Simulink is used to create the Ant Colony Optimization and FLC and to simulate DPFC model.

Keywords- ACO, Mitigation, Shunt converter, series converter, DPFC

I. INTRODUCTION

The future power system will be a meshed network and the power flow within this network, both the direction and quantity, will be controlled. To keep the system stable during faults or weather variations, the response time of the power flow control should be within several cycles to minutes. Without proper controls, the power cannot flow as required, because it follows the path determined by the parameters of generation, consumption and transmission .To fulfill the power flow requirements for the future network, power flow controlling devices are needed. The device that attempts to vary system parameters to control the power flow can be described as a Power Flow Controlling Device (PFCD).Depending on how devices are connected in systems, PFCDs can be divided into shunt devices, series devices, and combined devices (both in shunt and series with the system).Based on the implemented technology, PFCDs can be categorized into mechanical-based devices and power electronics (PE)-based devices. Mechanical PFCDs consist of fixed or mechanical interchangeable passive components, such as inductors or capacitors, together with transformers. PE PFCDs also contain passive components, but include additional PE switches to achieve smaller steps and faster adjustments. There is another term - Flexible AC Transmission System (FACTS) – that overlaps with the PE PFCDs. According to the IEEE, FACTS is defined as an alternating current transmission system incorporating power electronic based and other static controllers to enhance controllability.

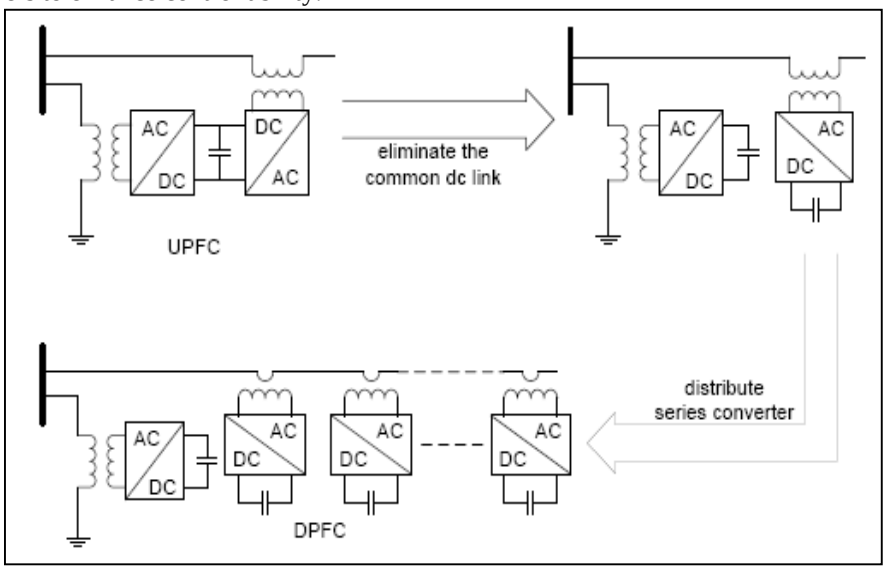

Fig. 1: Flow Chart from UPFC to DPFC

II. DPFC TOPOLOGY

By introducing the two approaches (elimination of the common DC link and distribution of the series converter) into the UPFC, the DPFC is achieved. Similar as the UPFC, the DPFC consists of shunt and series connected converters. The shunt converter is similar as a STATCOM, while the series converter employs the DSSC concept, which is to use multiple single-phase converters instead of one three-phase.

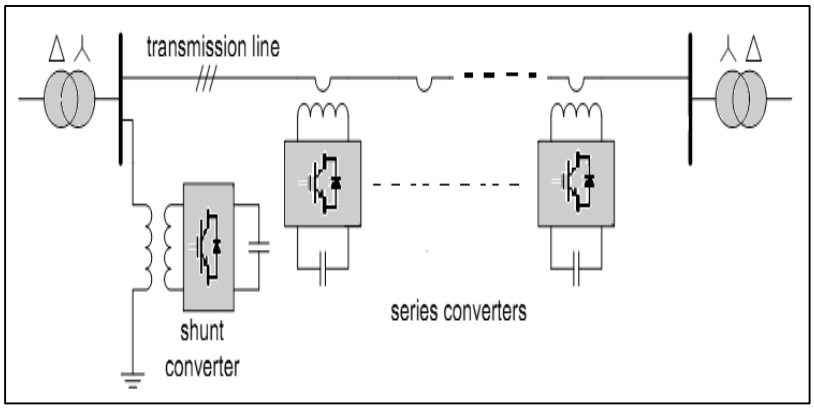

Fig. 2: DPFC structure

A. DPFC Operating Principle

Within the DPFC, the transmission line is used as a connection between shunt converter output and AC port of series converters, instead of using DC-link for power exchange between converters. The method of power exchange in DPFC is based on power theory of non-sinusoidal components [9]. Non-sinusoidal voltage and current can be presented as the sum of sinusoidal components at different frequencies. It is the main result of Fourier analysis. The product of voltage and current components provides the active power. Since the integral of some terms with different frequencies is zero. The active powers at different frequencies are independent from each others. Thus, the converter can absorb the active power in one frequency and generates output power in another frequency. Assume the DPFC is located in transmission line of a two-bus system; therefore, the power supply generates the active power and the shunt converter absorbs it in fundamental frequency of current. Meanwhile, the third harmonic component is trapped in Y-Δ transformer. Output terminal of the shunt converter injects the third harmonic current into the neutral of Δ-Y transformer. Consequently, the harmonic current flows through the transmission line. This harmonic current controls the dc voltage of series capacitors.

B. The DPFC Advantages

The DPFC in comparison with UPFC has some advantages, as follows:

1) High Control Capability

The DPFC can control all parameters of transmission network: line impedance, transmission angle and bus voltage magnitude.

2) High Reliability

The series converters redundancy increases the DPFC reliability during converters operation. It means, if one of series converters fails, the others can continue to work.

3) Low Cost

The single-phase converters rating, in comparison with three-phase converters is very low. Furthermore, the series converters, in this configuration, no need to any voltage isolation to connect in line. We can use the single turn transformers for series converters hanging.

III. MODELLING AND CONTROL OF DPFC

The DPFC has three control strategies: central controller, series control, and shunt control.

A. Central Control

This controller manages all the series and shunt controllers and sends reference signals to both of them.

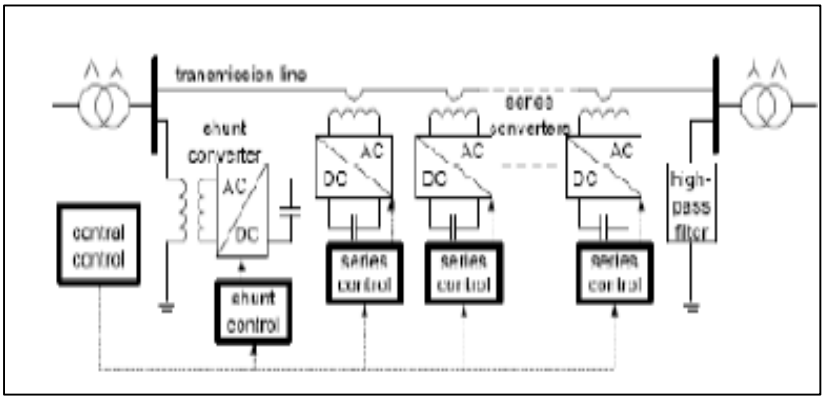

Fig. 3: DPFC basic control

B. Series Control

Each single-phase converter has its own series control through the line. This controller inputs are series capacitor voltages, line current and series voltage reference in dq-frame. Any series controller has one low-pass and one 3rd-pass filter to create fundamental and third harmonic current respectively. Two single phase lock loop (PLL) are used to take frequency.

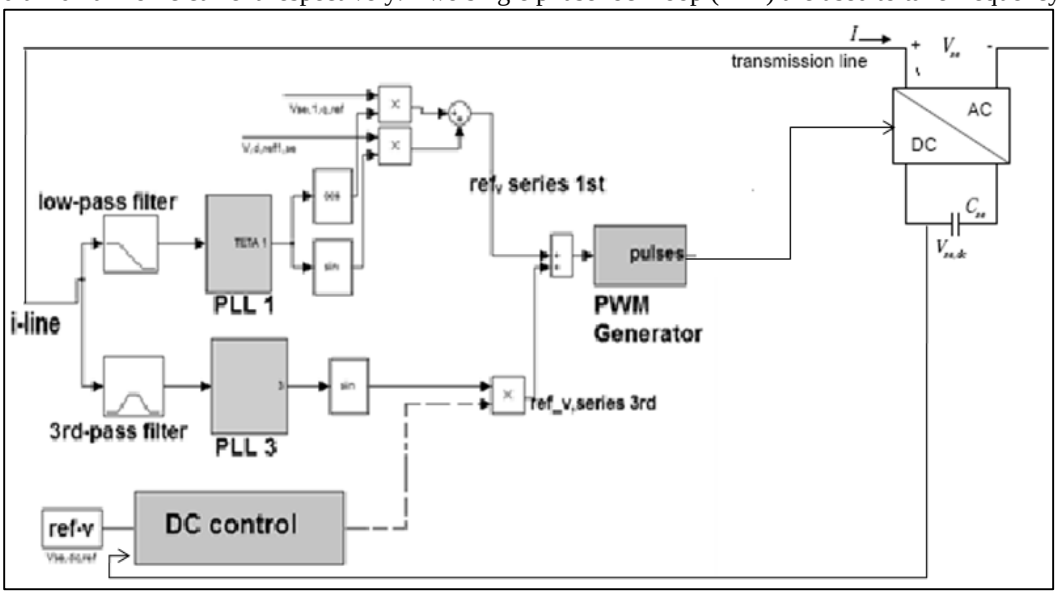

Fig. 4: control scheme of series converter

C. Shunt Control

The shunt converter includes a three-phase converter which is back-to-back connected to a single-phase converter. The three-phase converter absorbs active power from grid at fundamental frequency and controls the dc voltage of capacitor between this converter and single-phase one.

D. Ant Colony based DPFC

ACO is one of the most successful operations of fuzzy set theory; its major features are the use of linguistic variables rather than numerical variables. It provides a simple way to arrive at a definite conclusion based upon vague, ambiguous, imprecise, noisy, or missing input information.

IV. SIMULATION RESULTS

Simulation studies are carried out to analyze the performance of DPFC for voltage sag and voltage swell conditions in a transmission system. Here we have considered a Transmission system with a voltage of 230kV and 60Hz. A three phase fault with fault resistance of 50Ω near the load is said to be introduced into the system. Due to this voltage sag is created with a value 0.5 per unit.

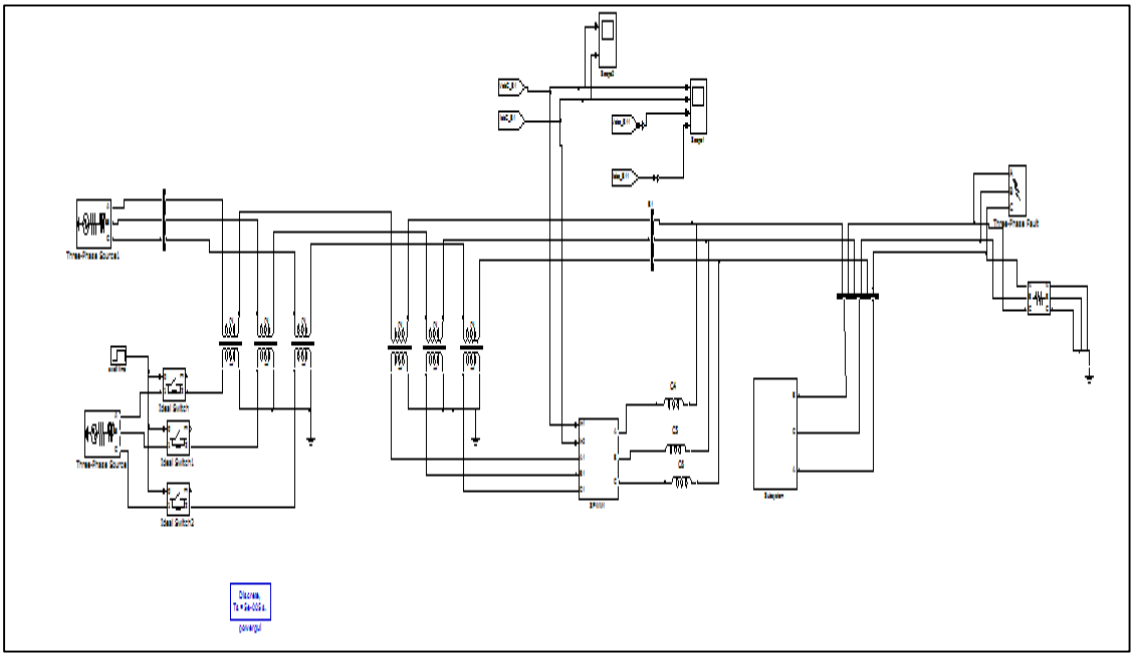

Fig. 5: Simulation diagram for ACO based DPFC

V. SIMULATION RESULTS

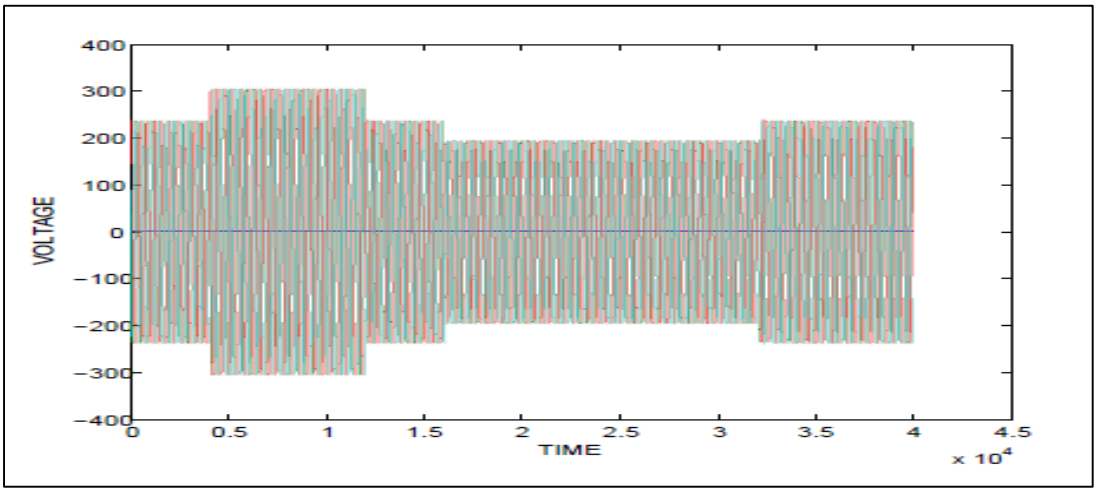

Fig. 6: voltage sag with DPFC

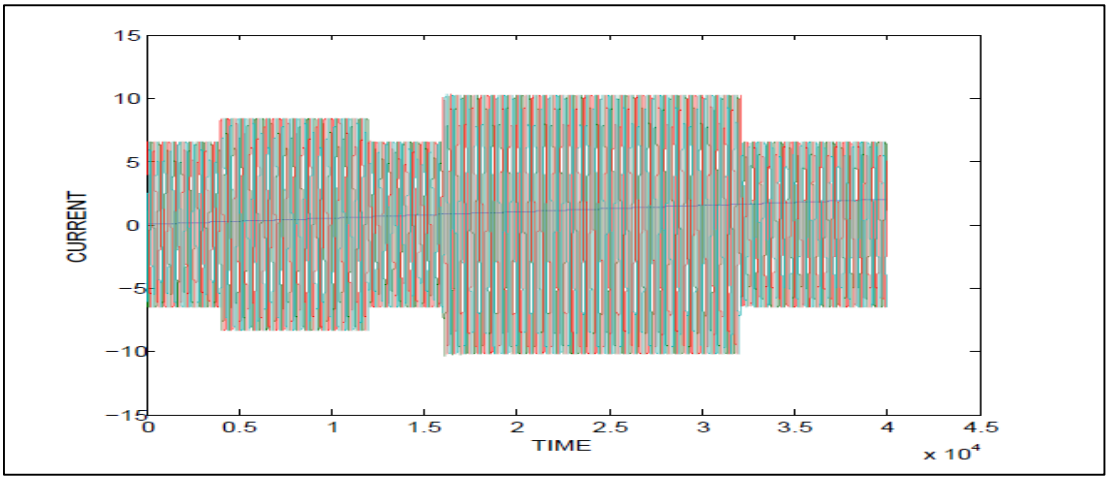

Fig. 7: current swell with DPFC

VI. SIMULATION RESULTS WITH ACO

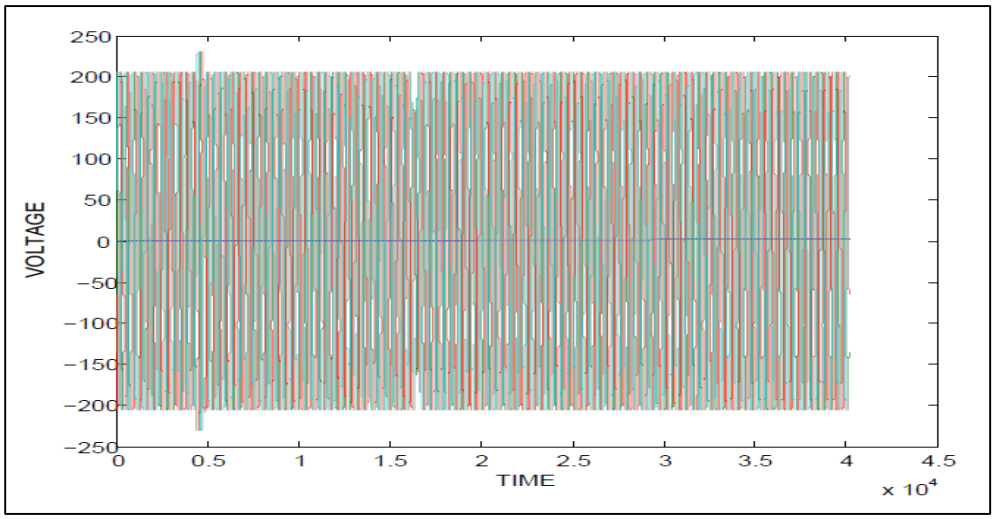

Fig. 8: voltage sag with ACO

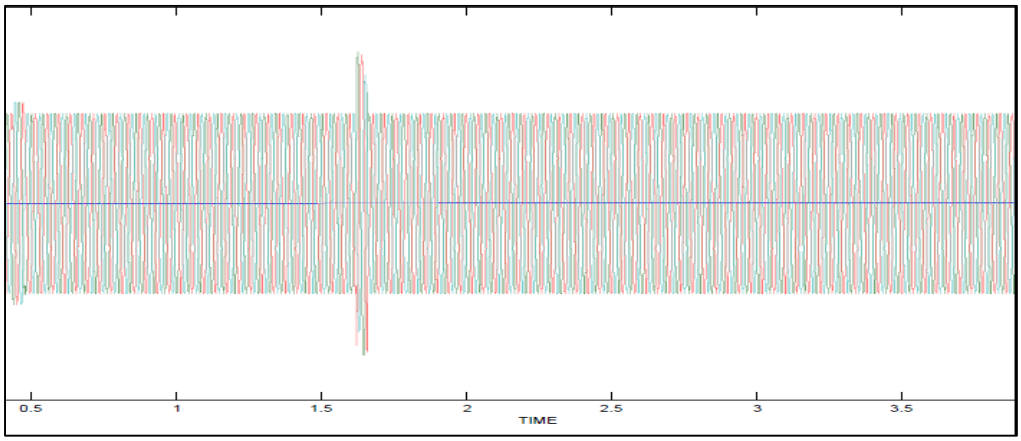

Fig. 9: current swell with ACO

VII. CONCLUSION

This paper has presented mitigation of various power quality issues like voltage sag and swells by using a FACTS device called Distributed Power Flow Controller (DPFC). The DPFC .is emerged from the UPFC and enables the control capability of the UPFC, which is highly reliable as it can control all the parameters such as line impedance, angle etc.

It differs from UPFC by two ways. They are the common dc link between the shunt and series converters, that is used for power exchange is eliminated. This power is now transmitted through the transmission line.

The series converter of the DPFC is similar to that of DSSC, which uses multiple small single phase converters instead of one large size converter. And shunt converter is similar to that of STATCOM. The reliability of the DPFC is greatly increased because of the redundancy of the series converters.

REFERENCES

[1] N.G.Hingorani and L.Gyugyi, "Understanding FACTS, Concepts and Technology of Flexible AC Transmission Systems". Piscataway, NJ: IEEE Press 2000.
[2] L. Gyugyi, C. D. Schauder, S. L. Williams, T. R.Rietman, D. R. Torgerson,and A. Edris. "The unified power flow controller: a new approach to power transmission control". Power Delivery, IEEE Transactions on, 1995.
[3] Y. H. Song and A. Johns. Flexible ac transmission systems (FACTS). Institution of Electrical Engineers, 1999.
[4] Ahmad Jamshidi ,S.Masoud Barakati and Mohammad Moradi Ghahderijani" " Power quality improvement and Mitigation case study using Distributed Power Flow Controller" ,IEEE Transactions on,2012.
[5] Zhihui Yuan, Sjoerd W.H de Haan and Braham Frreira "DPFC control during shunt converter failure" IEEE Transaction on Power Electronics 2009.
[6] R. Zhang, M. Cardinal, P. Szczesny and M. Dame. "A grid simulator with control of single-phase power converters in D.Q rotating frame", Power Electronics Specialists Conference, IEEE 2002.
[7] Zhihui Yuan, Sjoerd W.H de Haan, Braham Frreira and Dalibor Cevoric "A FACTS Device: Distributed Power Flow Controller (DPFC)" IEEE Transaction on Power Electronics, vol.25, no.10, October 2010.