Experimental Investigation on the Effect of Bond-Slip Behaviour of Steel Rebars in Concrete

Praveen Kumar.T.H
P.G Student
Department of Structural Engineering
Valliammai Engineering College

Dr. A. R. Santhakumar
Former Emeritus Professor
IIT Madras

Mrs. T. Swedha
Assistant Professor
Valliammai Engineering College

Abstract

This paper investigates about the Bond-Slip behaviour of steel rebars in reinforced concrete for Plain and Ribbed reinforcing bars. Bond strength is influenced by the rib pattern of the bar and RILEM suggested some recommendations to increase the bond strength of the concrete. Two grades of concrete M25 and M30 were casted. A total of eight specimens were casted using 25mm bar. The bond stress-slip response was studied. Graphical comparisons were done between the Load vs Slip and Load vs Displacement for RILEM standards. Slip was measured using LVDT at both ends. Ribbed bars showed better bond strength compared to plain bars and bond strength obtained from both tests produced same results.

Keywords- Bond strength, Slip, Ribbed bars, RILEM, Reinforced concrete, Rib geometry, Flexure

I. INTRODUCTION

The bond between steel and concrete is one of the main problems in the study of the concrete and it is still not completely studied. Due to the lateral displacement in any structure the first failure will be the bond failure. According to the literature, the bond-slip behaviour of the steel reinforcing bar is found out by flexural beam test – RILEM, usually there are two main experimental tests are available for finding the bond behaviour of steel bars, 1) pullout test embedded in a concrete cube at varying heights and the pull out of single bar placed in small cube specimen. 2) Beam specimens, due to its similarities with current structural elements subjected to bending, certainly provide a better estimative of bond strength. Bond is a necessary one for not only to ensure the composite action of steel and concrete but also to control behaviour of structural members. The bond in beam specimens subjected to bending; certainly provide a better estimative of the bond strength. The transfer of forces between steel bar and concrete is a fundamental mechanism for the existence of reinforced concrete. Bond strength varies in function of three parameters they are adhesion, cohesion and friction that is the main factor for the bond strength and the contact interaction among the materials caused by the deformation of the bars in contact with the concrete. In order to measure the bond slip the RILEM stands tall and the main influencing factors for bond in RC members depends on reinforcing unit and stress state in both reinforcing unit, surrounding concrete and others parameters such as concrete cover, space between rebars, number of layers and bundled bars, casting direction and also the bar position. The chemical adhesion and friction play key role in resisting the slip of the reinforcing bar. The maximum bond capacity decreases slightly with increasing bond resistance and it is not influenced by the bar diameter, lug spacing or relative rib area.

RILEM suggested some recommendations to study the flexural strength of the concrete beam and the bond – slip behaviour of the bar can be studied and the CEB/FIP widely accepted and treated as the local bond. The test is to determine the conventional bond characteristics of the steel used as reinforcement in reinforced concrete. Thus, test indicated the two curves that is representing the slip of the bar as a function of the load applied to the beam. The interfacial transition zone (ITZ) at the vicinity of the reinforcing bar affects the bond between steel and concrete. The ITZ depends on the constituent material used for making concrete. However, studies on the effect of bond strength between reinforcement and concrete with two different bars like plain bars and ribbed bars.. The bond ratio increases with increase of concrete cover, rib face angle and decrease of relative rib area. In plain reinforcing bar, due to the absence of ribs the friction or bonding with the concrete will be less compared to the ribbed reinforcing bar. The longitudinal cracking that appears is due to the compressive force radiating out in an inclination that varies with rib pattern. Also the compressive forces in-turn produce tensile stresses cracks in the surrounding concrete and cause successive splitting cracks followed by some critical splitting surface line between the steel bar and the surface of the concrete element. R. Tepfers and L. De Lorenzis (2003), This paper explains about the bond of ordinary steel reinforcement in concrete depends on many factors, such as the pullout resistance, the geometry of a concrete member, the placement of a bar in the member cross section, the cover splitting, the confinement caused by concrete and the surrounding reinforcement. Fernando M. de Almeida Filho (2007) The present study evaluates the bond behavior between steel bars and self-compacting concrete and

ordinary concrete performed in monotonically loaded beam tests, using the Finite Element Method. In the numerical model, concrete and steel bars were represented as non-linear behavior materials, combined with a model of the interaction between steel bars and concrete. The pull-out tests, very easy to perform, were the first considered to evaluate the bond strength. But since the beam tests are more reliable, and they also reflect the influence of the flexure, they were also considered, and among the several types of beam tests proposed to evaluate the bond strength, the Rilem standard test seemed to the best choice for this study purpose.

II. RESEARCH SIGNIFICANCE

This paper presents a study of the behaviour of beams and pull-out specimens through an experimental program. The main objective was evaluating the load vs displacement and load vs slip behaviour and the bond strength, regarding the influence of 25 and 30 Mpa and bar diameter of 25 mm.

III. EXPERIMENTAL PROGRAMME

A. Materials

Table 1: Initial Properties

CEMENT		*FINE AGGREGATE*		*COARSE AGGREGATE*	
Grade	*53 ppc*	*Specific gravity*	*2.66*	*Specific gravity*	*2.75*
Specific gravity	*3.15*	*Water absoprtion*	*1 %*	*Avg.impact value*	*14.28 %*
Initial setting time	*47 minutes*	*Fineness modulus*	*2.44*	*Fineness modulus*	*5.32*
Final setting time	*247 minutes*	*Bulk density*	*1615 kg/m^3*	*Bulk density*	*1530 kg/m^3*
Flakiness	*5.2 %*	*Zone*	*II*	*Flakiness*	*24.5*

Table 2: Rebar Properties

PLAIN REBAR	*PROPERTIES*	*RIBBED BAR*	*PROPERTIES*
Grade	*Fe500*	*Grade*	*Fe500*
Diameter	*25 mm*	*Diameter*	*25 mm*
Ultimate tensile strength	*649 N/mm^2*	*Ultimate tensile strength*	*653 N/mm^2*
Yield strength	*649 N/mm^2*	*Yield strength*	*537 N/mm^2*
Elongation limit	*18.4 %*	*Elongation limit*	*18.4 %.*
Weight	*3.792 kg.*	*Weight*	*3.8604 kg.*

Two different grades of concrete were selected 25 and 30 Mpa respectively. In 25 Mpa concrete, weight of the cement 300 kg/m^3 and water cement ratio was 0.45. The concrete mix proportions were 1:1.25:2.3:0.45. In 30 Mpa concrete, weight of the cement was 300 kg/m^3 and water cement ratio was 0.40. Mix proportions were 1:2.3:3.15:0.40. Six standard cubes were casted to determine the compressive strength of concrete.

B. Test Specimens

1) Flexural Beam Specimens

The bond tests were performed on RILEM beam specimens prepared according to RC5: RILEM-1978. The dimensions of specimen, reinforcement details and dimensions of steel hinge are shown in Fig.1(a). The overall size of the beam specimen is 1260x150x240 mm. the specimen comprises of two reinforced concrete blocks and is interconnected at the bottom by 25 mm test steel bar, whose bond strength is to be determined. A steel hinge is provided at the top of the specimen. The purpose of the steel hinge is to provide adequate rotation of the blocks during loading, which is necessary to obtain pure bond failure. The test bar extends outside the specimen to a distance of 120 mm at both ends of beam to measure the free end slip. The sizes of bars for reinforcement cage, spacing dimensions are shown in Fig.1(b) The bond length considered is 10 ϕ (ϕ = diameter of bar to be tested) and the remaining length on either side of the bonded portion of the bar is debonded using plastic sleeves. The concrete was cast carefully without disturbing the test bar and the hinge at the top of the specimen. Totally, RILEM beam specimens were cast in this work out with the plain bars and ribbed bars.

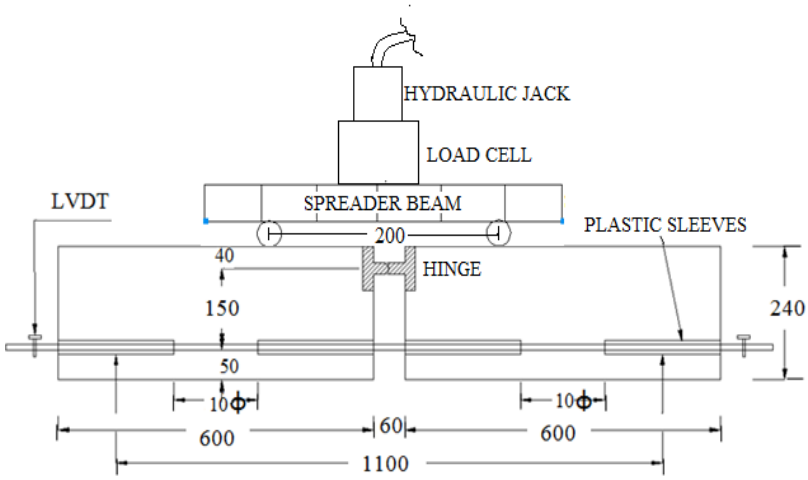

Fig. 1: (a) Experimental Setup

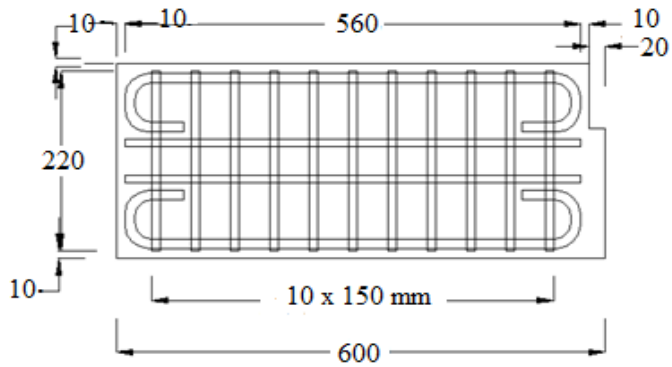

Fig. 1: (b) Reinforcement Details

2) Casting of Specimens

Fig. 2: Demoulded Specimens

Flexural beams were tested with 1000 kN capacity frame and steel hinge is placed on the top of the concrete beam and loading is applied in vertical direction. The LVDT is fixed at both ends to measure slip value and deflector is fixed at both sides to measure deflection and the displacement and slip is recorded at every 5 kN interval. The loading is taken until the specimen failure due to crack on the specimen or the bending of the reinforcing bar.

Fig. 3: Testing Of Beam

IV. RESULTS AND DISCUSSION

The determination of the bond stress for each bond stress for each slippage varies according to the test and the bar diameter. The equations below were used for determining the bond strength in the test.
For beam specimens:

$$\tau = \frac{\sigma_s}{40} \qquad \text{.....} \quad (1)$$

From the Rilem recommendation, the following provisions are to be used to calculate the stress in the reinforcement

$$\sigma_s = k.\frac{P}{A_s} \qquad \text{.....} \quad (2)$$

The parameter "k" in Eq. 3, varies accordingly to the bar diameter, where it assumes 1.25 for less than 16 mm diameter bar and assumes 1.50 for greater than 16 mm diameter bar.

Table 3: Test Results of Beam

SAMPLE	*"Pu" kN*	*"δ" mm*	*S_1 mm*	*S_2 mm*	*BOND STRENGTH(N/mm^2)*
M25-PLAIN BAR	*63*	*4.03*	*0.28*	*0.34*	*4.812*
M25-RIBBED BAR	*134*	*7.78*	*0.41*	*0.44*	*10.23*
M30-PLAIN BAR	*76*	*6.85*	*0.38*	*0.40*	*5.80*
M30-RIBBED BAR	*134*	*10.3*	*0.74*	*0.78*	*12.52*

A. Graphical Comparison- Beam results

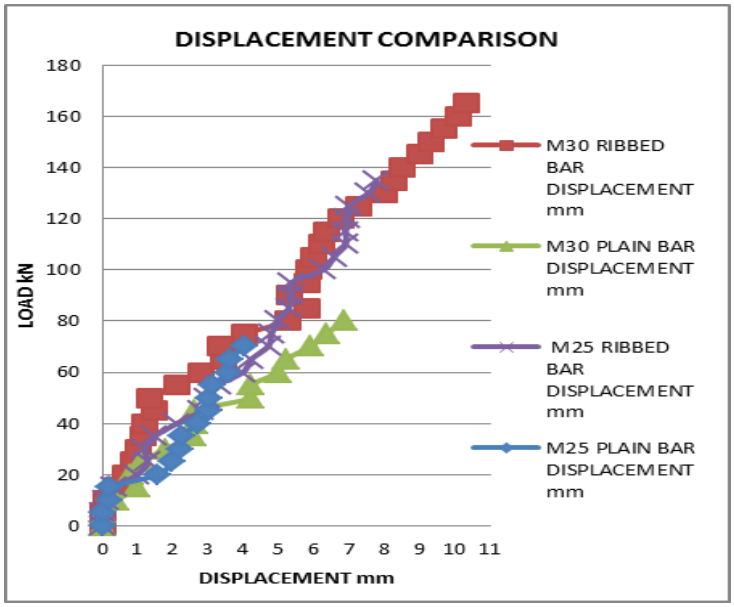

Fig. 4: Beam specimens-Displacement Comparison

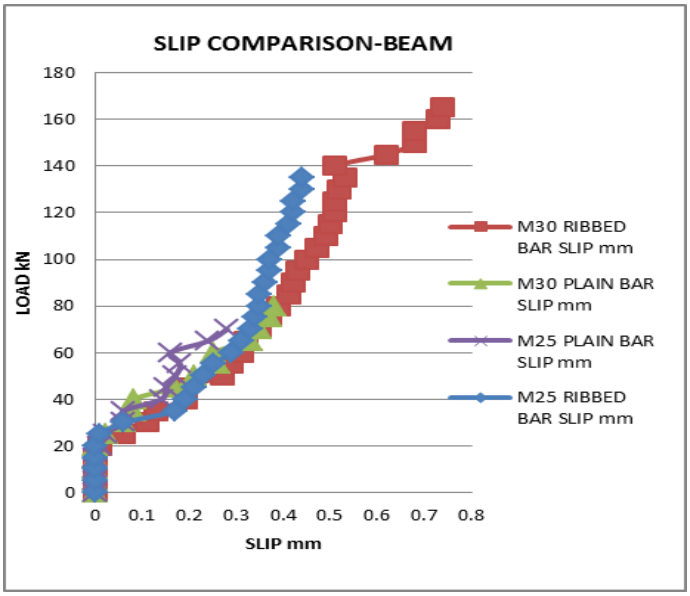

Fig. 5: Beam Specimens – Slip Comparison

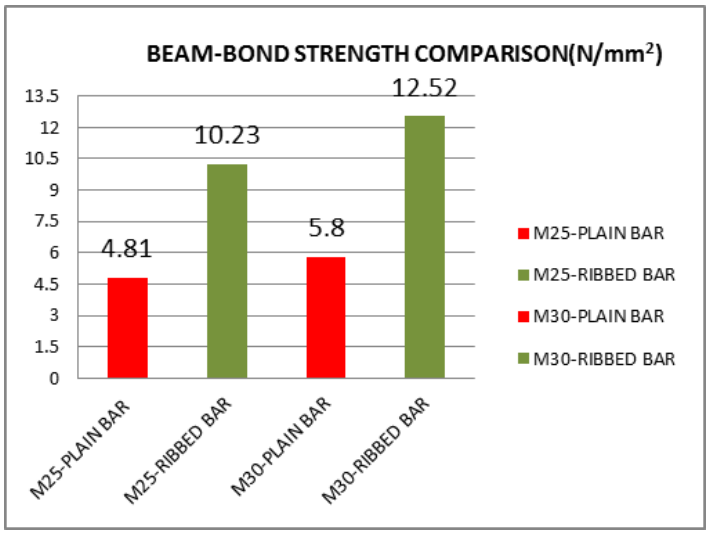

Fig. 6: Beam strength comparisons

V. FAILURE OF BEAM SPECIMENS

Fig. 7: Failure pattern – Bending of bar

Fig. 8: Crack Pattern in beam

VI. CONCLUSION

From the present study, the following conclusions were drawn:

1) The debonding of the specimens makes the specimens to fail at exact centre point so the results are accurate for the specified bar.
2) The Ribbed bar shows twice the bond strength compared to plain rebar and its almost above 80%.
3) Ribbed bar specimens showed the results were quite different. However the bond strength was similar, despite the difference presented in slip.
4) The bond strength also decreased as the embedment length increased.
5) If ribs are spaced in inclined direction the bond strength will be more compared to spiral shape.

The beam test was a very difficult test to be made and as a recommendation must be reserved for some special cases. So, the pull-out tests must be used in usual cases, because of its simplicity, good accuracy and time consuming, since some care should be taken for the embedment length and bar diameter for the correct evaluation of result.

APPENDIX

- P_u = Maximum applied load, kN
- S_1 = Maximum slip for failure load in beam test for LVDT 1, mm
- S_2 = Maximum slip for failure load in beam test for LVDT 2, mm
- τ_s = Bond stress, MPa
- δ = maximum deflection, mm
- A_s = Nominal cross sectional area of test bar, mm^2
- σ_s = stress in steel, MPa

ACKNOWLEDGMENT

I would like to thank Dr.A.R.SANTHKUMAR and Mrs.T.SWEDHA for guiding me throughout the project and also VIKI INDUSTRIES at GUMMIDIPOONDI for helping me to complete my project financially.

REFERENCES

[1] Appa Rao G., Faiz Sultana., and Pandurangan K., "Bond strength and bond stress slip response in reinforced concrete", Journal of Structural Engineering, Vol. 36, No. 5, Dec 2009-Jan 2010, pp. 347-353.
[2] Ana Lúcia H. de C. El Debs (2007), "Theoretical and numerical approach of the bond behavior in beam tests using self-compacting and ordinary concrete", Escola de Engenharia de São Carlos – EESC".
[3] F. M. Ameida Filh (2006), "Pull-out behavior of deformed bars using high strength self-compacting concrete and high strength ordinary concrete", IBRACON Structural Journal, Volume 2, Number 1
[4] John N. Karadelis, Yougui Lin,(2015) "Flexural Strengths And Fibre Efficiency Of Steel-Fibre-Reinforced, Roller-Compacted, Polymer Modified Concrete" Construction And Building Materials "93 (2015) 498–505.
[5] K. Pandurangan, G. Appa Rao (2012) "Bond strength of epoxy coated bar splices confined with nominal lateral reinforcement", Central European Journal of Engineering

[6] Krishnamurthy Pandurangan(2013), " Effect of fusion bonded epoxy coating and rib geometry on the bond strength of reinforced concrete" The Indian Concrete Journal January edition Pg No: 33 to 43
[7] M. K. El Debs, A.L.H.C. EL Debs, (2013), "Numerical approach of the bond stress behavior of steel bars embedded in self-compacting concrete and in ordinary concrete using beam models", IBRACON Structural Journal, Volume 6,number 3 Pg No 499 to 512
[8] Indian standard code of practice titled Recommended guidelines for concrete mix design, IS 10262 : 1982. Bureau of Indian Standards, New Delhi.
[9] Indian standard code of practice titled "Specification for coarse and fine aggregates from natural sources for concrete". IS: 383 – 1970. Bureau of Indian Standards, New Delhi
[10] Indian standard code of practice titled "Specification for 53 Grade Ordinary Portland Cement". IS: 12269-1987, Bureau of Indian Standards, New Delhi
[11] RILEM-FIP-CEB. Bond test for reinforcing steel: 1-Beam test (7-II-28 D). 2-Pull-out test (7-II-128): Tentative recommendations. RILEM Journal Materials and Structures, Vol. 6, No. 32, April-March, 1973.